Audo

RAY PORTABLE LAMP

Designed by *Daniel Schofield*

DESCRIPTION	The Ray Portable Lamp is available in black or dusty green powder-coated metal, features an LED bulb, and offers three dimming settings.

SKU	71224-001279	**COUNTRY OF ORIGIN**	China
EAN	5709262125142	**MATERIALS**	Aluminium, ABS
COUNTRY VERSION	EU / US / UK / CN / AU	**TESTS & CERTIFICATIONS**	EMC CE Certified ETL certified
FINISH	Aluminium, Black		
DESIGNER	Daniel Schofield	**CO2e**	29.9 Kg
DESIGN YEAR	2022	**WARRANTY**	2 years (Download)
PRODUCT TYPE	Table Lamp - Portable	**CARE INSTRUCTIONS**	Care instructions Finish
ENVIRONMENT	Indoor,Outdoor		

Audo

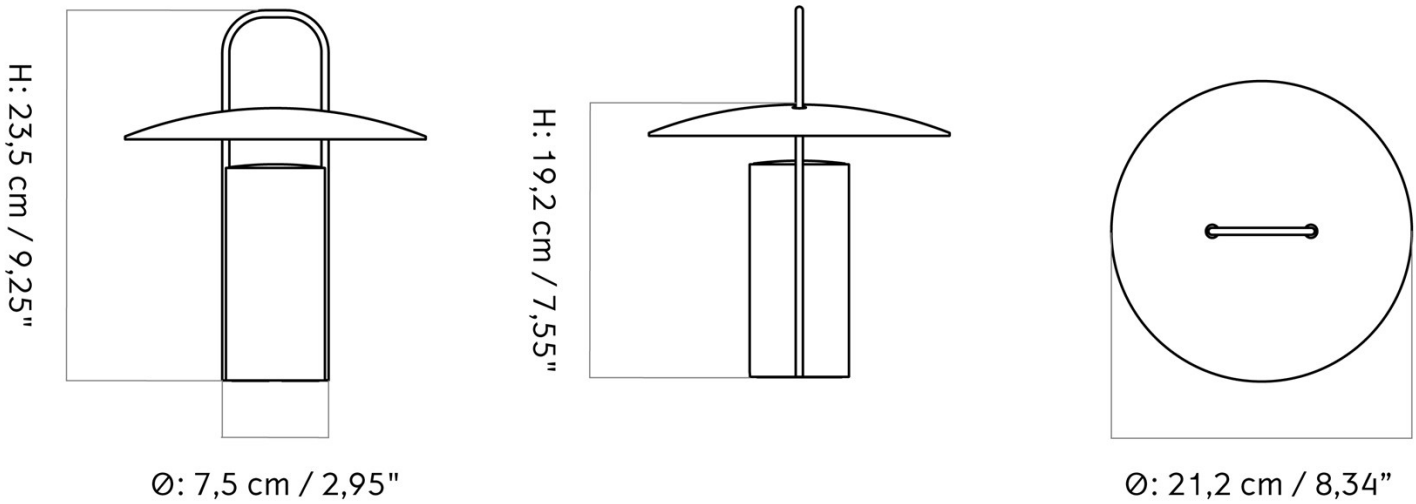

RAY PORTABLE LAMP
Designed by *Daniel Schofield*

TECHNICAL SPECIFICATIONS

DIMENSIONS	Product Height: 10.28 " Product Width: 8.66 " Product Depth: 8.66 " Product Diameter - Ø: 8.66 "
NET WEIGHT	1.896 Lb
GROSS WEIGHT	3.691 Lb
PACKAGING TYPE	Gift Box
PACKAGING MEASUREMENTS	H x W x D 12.44 " x 10.12 " x 10.04 "
PRODUCTION PROCESS	Spun aluminium shade with aluminium extuded body.
LIGHT SOURCE	1 x Replaceable LED 5 V Max 2.5 watt
BATTERY LIFETIME	
100%	11 hr
50%	16 hr
25%	45 hr
INCLUDED BULB	1 x Replaceable LED 2.5 W 2750 K 85 lm CRI: Ra > 80 Dimmable: Yes Energy Rating: G Lifetime: 25000 hours
DIMMER	
DIMMABLE	Yes
DIMMER TYPE	3- step
CORD	
COLOUR	Black
LENGTH	31.5 "
CHARGING CABLE TYPE	USB cord with magnetic connector
IP CLASSIFICATION	IP 44
PROTECTION CLASS	3

Audo

RAY PORTABLE LAMP
Designed by *Daniel Schofield*

SPARE PARTS Find relevant spare parts for this product to support long-term maintenance.

SPARE PARTS	VARIANT	SPARE PART SKU
	Charging Cable For Portable Lamps, EU/UK/US/CN/JP/AU	81111000798
	Hashira/Ray Table, LED PCB, EU/UK/US/CN/JP/AU	81111000867
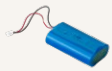	*Hashira/Reverse/Ray Portable Battery Pack*	81111000866